# Robot Arm Team #2

Team Members: Maximus Almanza, Anthony Alvarez, Jose R Valle, Vincent Gutierrez
Sponsor: Shorbagy Mohammed

## Executive Summary:

The Robot Arm project is a Capstone design project offered to mechanical and aerospace engineering students at the University of California, Irvine. The goal of this design project was to create a remote-controlled robot arm. To begin the project, the "MARV Engineering" team first defined what we wanted to accomplish with our final design. Looking in the larger scope of robotics, we saw that the majority of robotic arms are used in industry, so we used these types of arms to inform our design choices. Our final design aimed to complete the following objectives:

| | Objective |
|---|---|
| 1 | The robot arm should be roughly half the size of a human arm |
| 2 | The robot arm must have two joints |
| 3 | The arm must move in 3 dimensions |
| 4 | The arm must be remote-controlled |
| 5 | The arm must read and display its position |
| 6 | Lightweight construction |
| 7 | Low-Cost |
| 8 | Should accommodate commonly used end effectors |

Due to the small scale of the robot arm, we decided to focus on a robot arm that could focus more on precision rather than strength. When it came to the remote control method, we decided on constructing a "proxy arm." This arm would be a smaller scale version of the larger arm that would translate its movement to the movement of the larger arm. In the end, we were successful in manufacturing a remote controlled arm. We 3d printed all the linkage parts of the robot arm and proxy arm. Using a combination of stepper and servo motors, we were able to move the arm in 3D. Integrating a LCD screen, we are also able to display the position of the robot arm.

## Rapid Prototyping: The flexibility of 3D printing allowed for the development of multiple prototypes

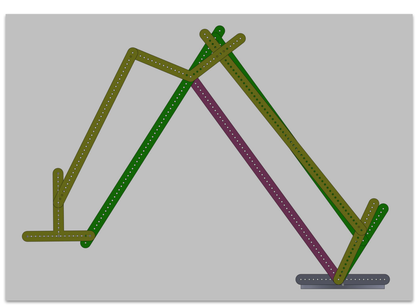

Figure 1: First Arm CAD Design

Figure 2: First 3D printed Arm Design

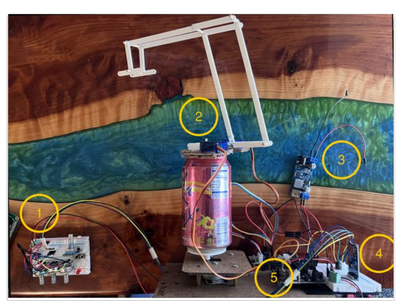


Figure 3: First Working Prototype

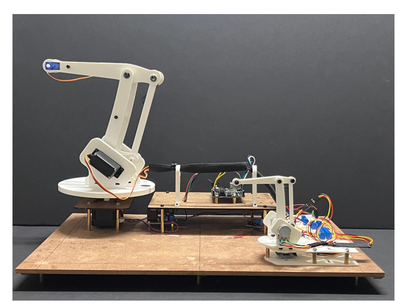

Figure 4: Final Working Design

## Design Solution:

### Robot Arm:

An articulating arm is an excellent solution due to its exceptional flexibility and precision. The ability of an articulating arm to move in multiple dimensions allows it to perform intricate and complex tasks with high dexterity. There are multiple types of arms. To evaluate these arm types, we developed a design matrix that ranked the arm types based on the requirements of our design (See figure 5). From the matrix, the jointed arm type was the best choice for our needs.

### 3D Printing:

The final robot arm and proxy arm were 3d printed using PLA filament. When it came to methods of manufacturing the arm, we looked at 3d printing, laser cutting, and injection molding. We input these methods into our design matrix along with important qualities of manufacturing (See Figure 6). 3D printing had the high score on the matrix, and it has the greatest range of flexibility for manufacturing.

| Arm Design | | | | |
|---|---|---|---|---|
| Requirements | Weights [%] | SCARA | Jointed | Polar |
| Half the size of a human arm | 20 | 5 | 5 | 5 |
| Two joints | 20 | 5 | 5 | 4 |
| Accommodate commonly used end effectors | 20 | 5 | 5 | 5 |
| Move in 3 dimensions | 40 | 4 | 5 | 3 |
| | | | | |
| | 100 | | | |
| | Score: | 4.6 | 5 | 4 |

Figure 5: Design Matrix for Robot Arm Types

| Manufacturing | | | | |
|---|---|---|---|---|
| Requirements | Weights | 3D Printing | Laser Cutting | Injection Molding |
| Time | 30 | 4 | 5 | 5 |
| Tolerance | 10 | 5 | 2 | 5 |
| Cost | 20 | 4 | 3 | 1 |
| Availability | 20 | 5 | 4 | 1 |
| Weight | 10 | 5 | 4 | 5 |
| Strength | 10 | 4 | 4 | 4 |
| | | | | |
| | 100 | | | |
| | Score: | 4.4 | 3.9 | 3.3 |

Figure 6: Design Matrix for Manufacturing Methods

## Special Sauce: Proxy Arm

Our arm was controlled using servo motors as they offer high-precision control over position, velocity, and torque. They can maintain a specific position with high accuracy. The rotation of the arm was controlled via a stepper motor because they can operate in an open-loop control system. This means that they do not require external feedback to determine the position. All the logic was controlled by an Arduino Uno.

Our robot arm utilizes a "proxy arm" as its control interface. This arm is essentially a scaled-down version of the larger arm. This proxy arm allows for straightforward and intuitive control of the larger arm. Our objective was to establish a 1 to 1 relationship between the proxy arm and the robot arm. This approach allows for control method that is both simple and accurate.

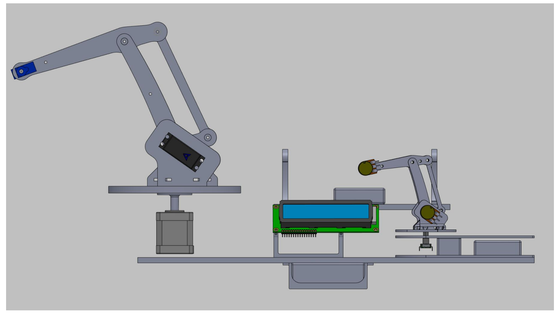

Figure 7: Final CAD design of robot arm and proxy arm

## Project Evaluation:

Our finished design accomplished the following:

- Measures approximately 10 inches
- Has three joints
- Working proxy arm remote control
- Moves in 3 dimensions
- Integration of LCD screen to display position

While we were successful in making an articulating robot arm, we were not able to make it as precise as desired. The code for control system is not as precise as the original design planned.

If given more time, the code for the proxy arm controller can be better optimized for improved performance. We would also aim to integrate an LCD display. Due to time constraints, we had to limit the full range of the robot arm. WIth future improvements, we would aim to allow for a full 360 degree range of motion. With the majority of businesses and industry transferring to a completely autonomous assembly line. The development of robot arm technology is an enterprising research subject.