UCI Samueli
School of Engineering

189 Midterm Presentation

High Pressure Quick Disconnect

Sky Hargrove, Ryan Jones, Phillip Choi
Advisor Prof. Shi

Problem Definition

Most pressure fed rocket engines make use of high pressure pressurant tanks that should be topped off after pressing propellant tanks. One of the ways to accomplish this safely is to make use of a remotely controlled high pressure quick disconnect (QD) system. The system would be responsible for disconnecting the high pressure pressurant fill line after refilling the pressurant tank to nominal pressures. By excluding the need to have a manual high pressure disconnect while the pressurant tank is at max pressure eliminates a source of risk during the fill process.

What is a Quick Disconnect

Quick disconnect fittings (abbreviated as “QDCs” or “QDs”) are used to provide fast and easy connection and disconnection of fluid lines. These fittings are also known as quick connects or quick release couplings. Typically quick disconnect fittings are operated by hand. They often are used to replace fitting connections which require tools to assemble and disassemble. There are a myriad of quick disconnect fittings types and they are found in all industries (beswick engineering).

Fig. 1 - Manual Disconnect

Sky Hargrove

Design attributes and requirements

- Attributes:
- System must be actuated directly from the current electronic system
- System must be compatible with the current Preliminary Test Rocket (PTR) meaning the QD must withstand its own weight when perpendicularly placed on the hoisted PTR assembly.
- System must not leak excessively

- Requirements:
- Full CAD assemblies and parts
- Written assembly guide
- Complete Manufacturing guide
- Functional prototype interfacing with commercial QD
- High Pressure (5,000 psi)
- FOS of 2
- Remotely actuated
- Easily machined/readily available parts (faster lead time)

Project and Team's Objectives

Objective:

The objectives for the High Pressure Quick Disconnect Project is to design a remotely operated quick disconnect system for the UCI Rocket Team's pressurant filling system. The purpose of the system is to minimize risk of injury during tank filling, since the operator can be a safe distance away rather than doing it manually. The team's objectives for this quarter include choosing the quick disconnect fittings, deciding on an actuating system, and final assembly/testing.

Initial Designs

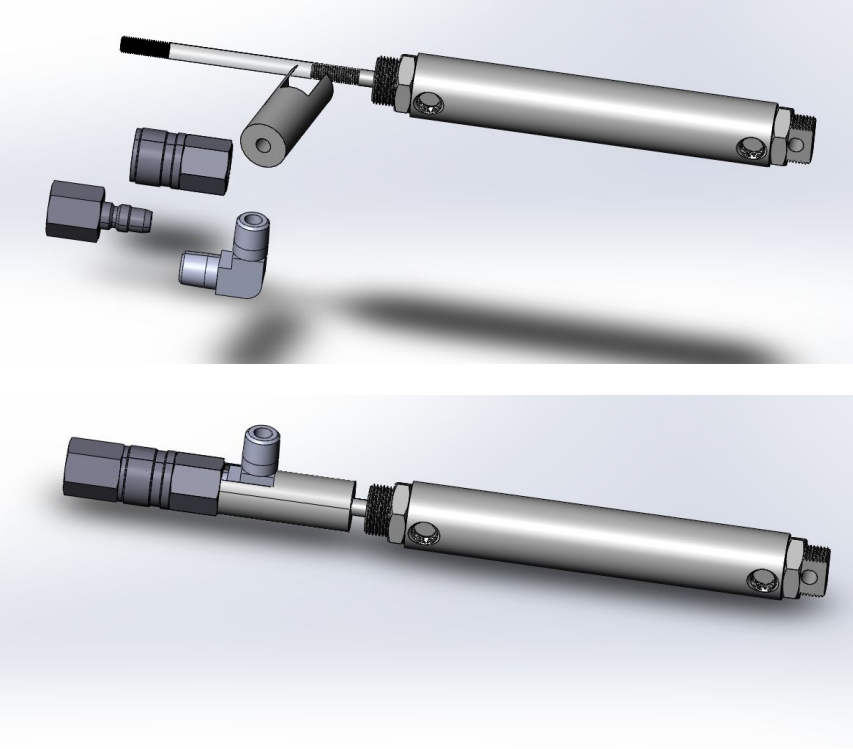

Piston with Machined Collar

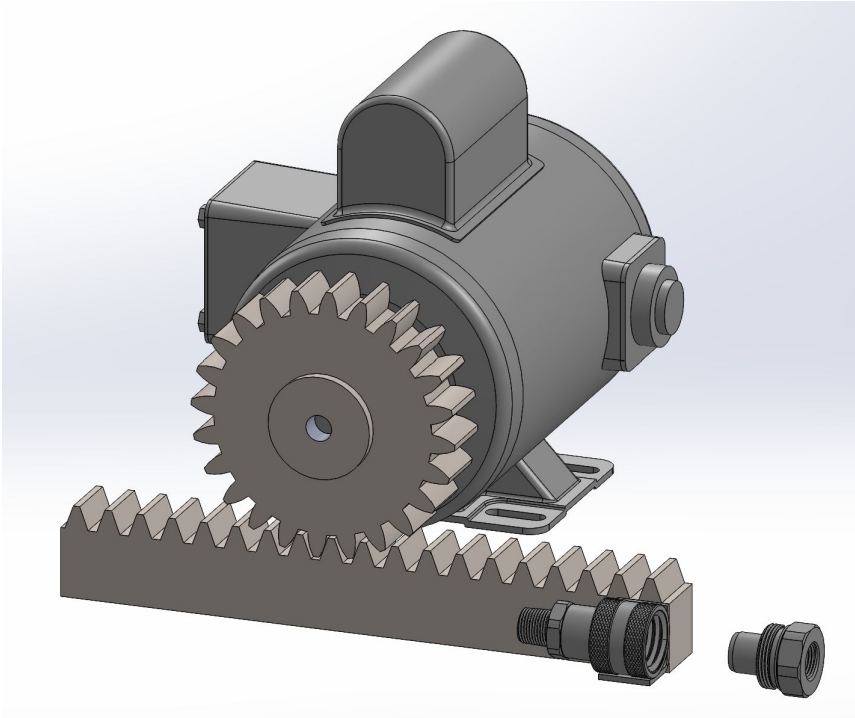

Gear with Motor

Sky Hargrove and Phillip Choi

Concept Selection Process

Gear Rack Model

- Connection problem
- Motor control problem
- Difficult to fix system firmly with the gear and gear rack
- Difficult to calculate how much power will be used
- Expensive

Machined Collar Model

- Low flow rate with smaller diameter 90° fitting
- Longer lead times for machined collar
- May incur costs with multiple iterations
- Collar could disconnect due to few connection points

Justification for Proposed Design

Criteria (Out of 5)	Design Alternative #1 Gear With Motor	Design Alternative #2 Machined Collar	Design Alternative #3 Pushing Plate
Safety	4	5	5
Ease of Use	3	4	4
Appearance	5	4	3
Cost of Production	1	3	5
Totals (20 maximum)	13	16	17

Key Equations

- Air pressure equates to force on the cylinder

Force (lbs) = pressure (psi) * area (in^2)

- Factor Of Safety

(Failure Strength)/(Applied Stress)

- Mass flow through small orifice (Gas)

$m = cd\ (\pi / 4)\ D22\ \rho\ [\ 2\ (p1 - p2) / \rho\ (1 - d4)\ ]1/2$

- Bernoulli's Equation (using heights)

$p1 + 1/2\ \rho\ v12 + \gamma\ h1 = p2 + 1/2\ \rho\ v22 + \gamma\ h2$

QD Proposed Design

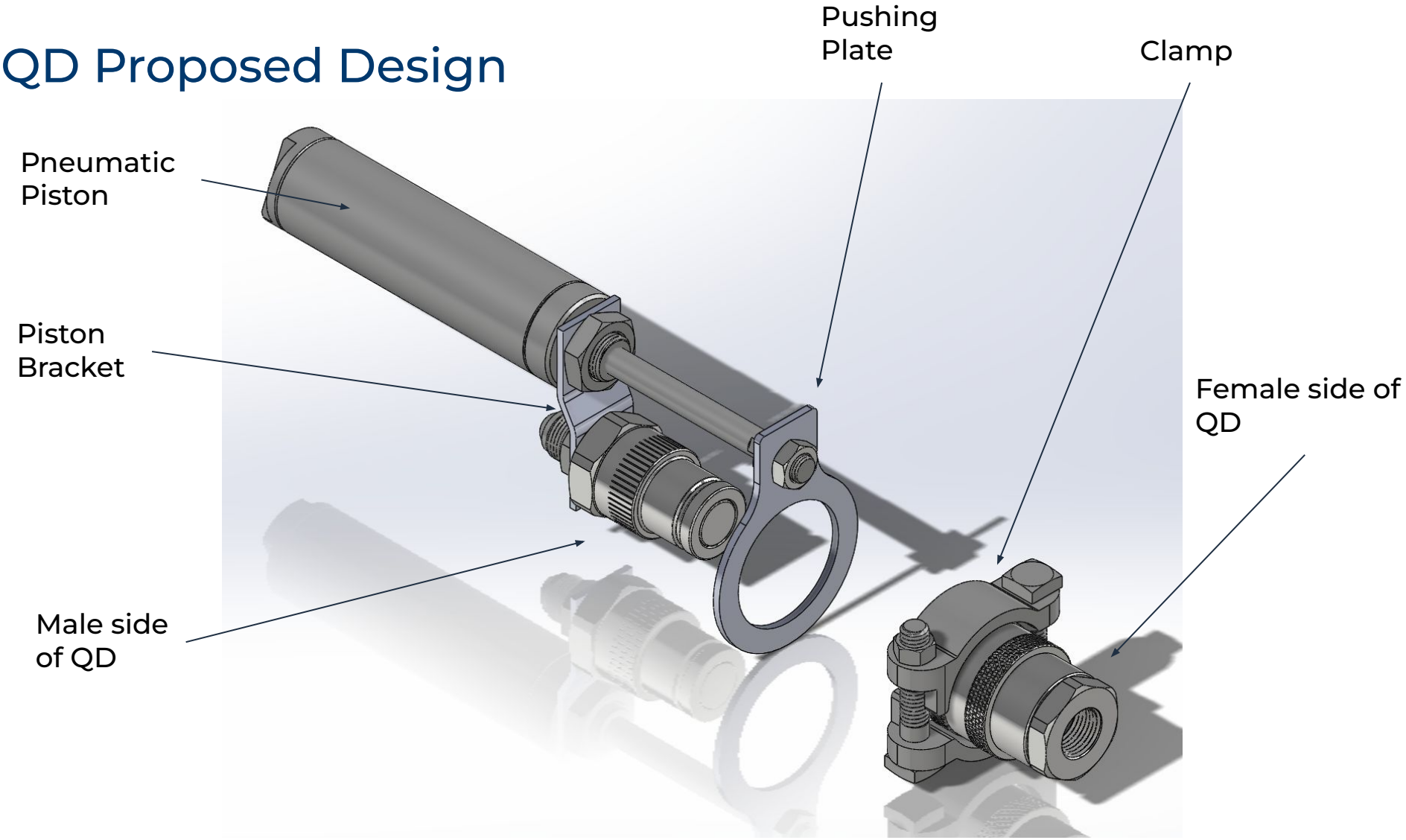

Ryan Jones

QD Proposed Design

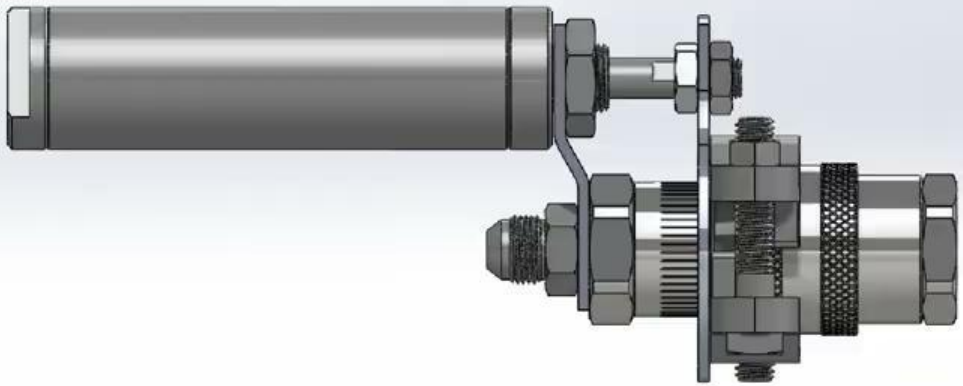

1. Piston pushes female QD's collar back
2. Collar Reaches its stop
3. Piston begins pulling male QD away
4. Piston reaches full extension
5. Entire assembly continues away from rocket

QD Proposed Design

- Uses a double shut-off, flush face quick disconnect.
  - Rated for 10,000 PSI (twice expected 5000 PSI)
  - Minimal leakage
- Clamp design allows us to change quick disconnect hardware without modification in the future if necessary
- Impact resistant piston
- Only needs 2 custom fabricated parts
  - Both made of ⅛" steel or aluminum plate
  - Easily manufactured by hand at minimal cost
- All off the shelf parts available from McMaster Carr/Swagelok
  - Short lead time
  - Easy replacement in the future if necessary
- Easily actuated remotely via a 12V input to the solenoid

Off the shelf cost: $405.60
Manufactured parts cost (estimated): $40

Total Cost Estimate: $445.60 + taxes and shipping

SWOT Analysis

Strengths
- Simple design, only a handful of failure modes
- Inexpensive, easy to manufacture
- Parts are readily available with short lead time

Weaknesses
- Potential to get stuck due to the assembly being designed to fall away unguided
- Parts bending or breaking could result in system failure
- Disconnect could get stuck if enough torque is applied

Opportunities
- Reducing risk to life and limb
- Allows the UCI rocket team to top up the pressure of their COPV tank

Threats
- System failure would result in a pressurized rocket that is unsafe to approach.
- A failure like this could result in scrubbed launch or catastrophic failure.

Major Parts to be ordered

Part Name	McMaster Carr Part No.	Cost
Male Quick Disconnect	53645K33	48.71
Female Quick Disconnect	53645K13	81.96
Pneumatic Cylinder	6498K208	56.29
Solenoid	6124K271	111.96
Air Hose	5648K74	20.50
Air Hose Fittings	6349T12	12.28
Clamp	5411K71	18.09

Parts to be machined

Pushing Plate
⅛” Thickness

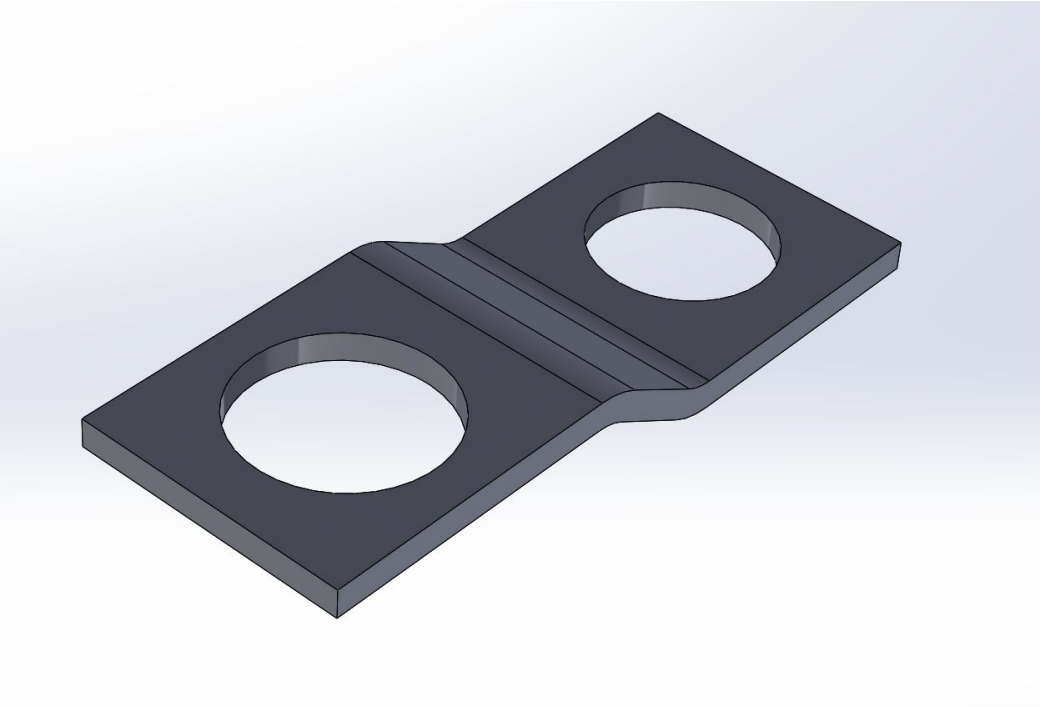

Pneumatic Cylinder Bracket
⅛” Thickness

Ryan Jones

QD Proposed Decision Timeline

Timeline	Week 6	Week 7	Week 8	Week 9	Week 10	Post 189
Design Decisions	- Choose QD design - Finalize mounting system	- Finalize parts list	- Finalize drawings for machined parts - Decide on material for machined parts	- Finalize assembly	- Finalize plumbing integration	- Continued testing

Verification Schedule

Week 5-6	Week 7-8	Week 9-10	Post 189
Continue writing 189 documentation Begin researching parts	Documentation finalized Begin ordering parts and assembly	Begin assembly Design review (week 10)	Finalize assembly Test assembly on system Work with Rocket Team to test system and implement the QD

Items to be resolved

- What material will our machined parts be made of?
  - Aluminum or steel?
- Are our machined parts thick enough to resist bending?
  - We will run a basic FEA simulation to evaluate our design
- Where will our solenoid be placed?
  - Need to discuss with rocket team to find out what other equipment is near and if we can place the solenoid with it.

Works Cited

Honkawa, D. (2021, August 27). QD SEP MK2. Derek Honkawa Rocketry. Retrieved February 7, 2023, from https://dhrocketry.com/2021/05/31/qd-sep-mk2/

The basics of quick disconnects. Beswick Engineering. (2019, August 9). Retrieved February 7, 2023, from https://www.beswick.com/resources/the-basics-of-quick-disconnects/#:~:text=Quick%20disconnect%20fittings%20(abbreviated%20as,fittings%20are%20operated%20by%20hand.