LiDAR Vision: A "DIY" LiDAR Module to Map a 2D Layout

Calvin Chu, Ryan Nguyen, Zach Whitrock, Tian Xu
Department of Mechanical and Aerospace Engineering at University of California, Irvine
Sponsored by Navid Rezazadeh

UCI Samueli School of Engineering

What is LiDAR?

Light Detection and Ranging (LiDAR) works by emitting a beam of light and measuring the amount of time it takes for the light beam to bounce off an object and return to the sensor. A point cloud can be generated using these calculated distance to map the actual environment for autonomous systems.

Objectives

Develop an affordable 2D scanning LiDAR system with better precision than the current 2D LiDAR systems available in the market (up to 10 meters). The system is easily designed and assembled so that anyone with a 3D printer can download the files to make their own LiDAR module.

Design Criteria

- Compact chassis (130 mm x 90 mm).
- Implement a 360° LiDAR configuration.
- Optimize a localization algorithm.
- Maintain budget under 60 dollars.

Mechanism

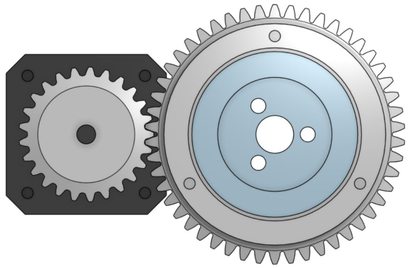

Fig. 6 CAD model of gear set

- 2:1 gear ratio allows for ½ and ¼ steps
- 3D printed gears are cheap to produce, customizable, and easy to assemble
- Higher resolution at a longer range

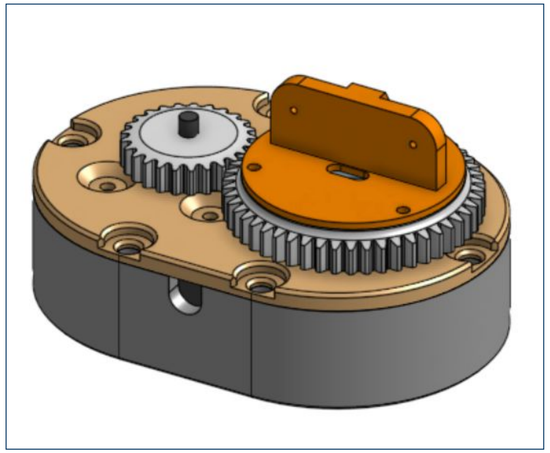

Fig. 1 CAD Illustration of the LiDAR Module

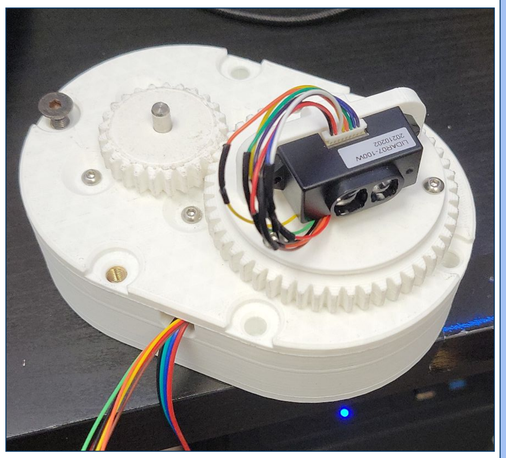

Fig. 2 3D printed prototype

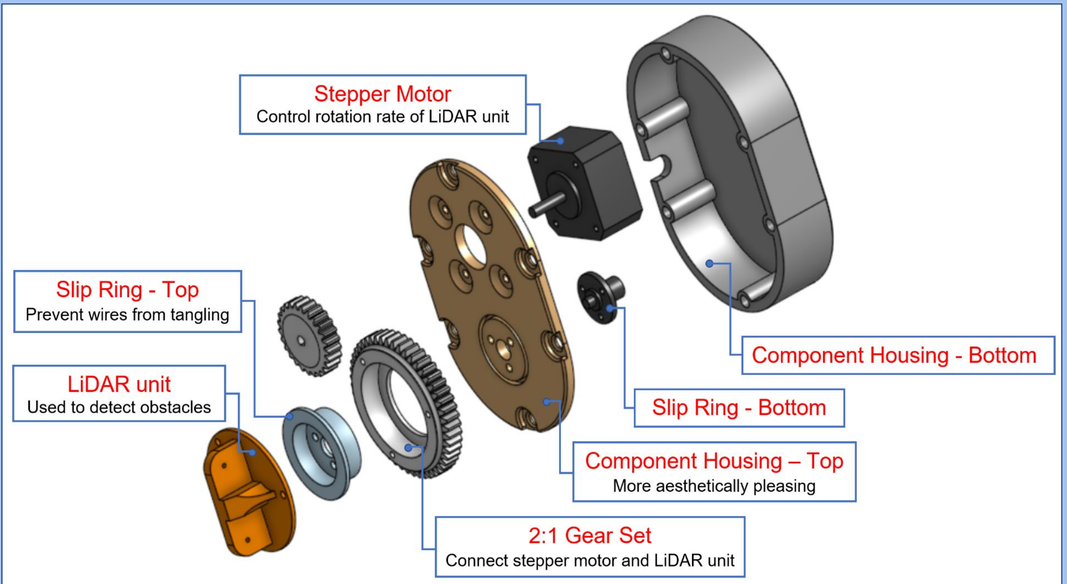

Fig. 3 exploded view of the prototype

Acknowledgements: Our team would like to thank Professor David Copp for your expertise and for making this project possible. We would also like to thank our sponsor, Navid Rezazadeh, for your patience in helping us to make this a meaningful project.

References:

(1) "Laser technology and modeling tools for precision forest inventory, monitoring, and planning." Rocky Mountain Research Station, www.fs.usda.gov.
(2)"LiDAR scanning for use in Architecture, Engineering & Construction(AEC)." Frontier Metrology, www.frontiermetrology.com.

Analysis

360° field of view in 1.8° steps. Each step populates point cloud map at 500 Hz sample rate. LiDAR camera has resolution of 1.25 inches at 1 meter radius.

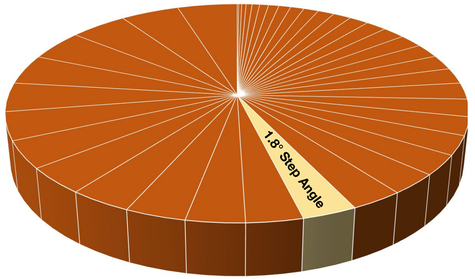

Fig. 4 Pie chart showing the step angle

Linear displacement at 1 meter:

$$\frac{x}{sin(1.8°)} = \frac{1m}{sin(89.1°)} \rightarrow x = 0.314m$$

$$0.314\ m \approx 1.25\ in$$

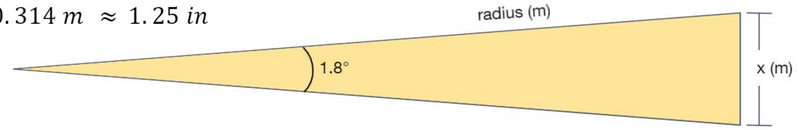

Fig. 5 Zoomed in view of single step and linear displacement

Hardware Performance

- Generates 2D map of 10m radius room in under 10 seconds.
- Stepper motor torque is sufficient to rotate LiDAR tray even with larger friction coefficient from gear teeth.
- Camera capable of mapping finer resolution - operation is scalable to either larger room or narrower objects.

Impact on Society

- For construction applications, a small and mobile LiDAR tool for accurately mapping odd material cuts would cut down on material waste and reduce time building time tables.
- Forestry application would allow for accurate documentation of forest growth, cutting down on the need for expensive cameras.

Future Improvements

Higher Resolution Point Cloud

- Additional gears further reducing gear ratio and step angle.
- Smaller, precision, angles that enable perceived continuous rotation and allow for more accurate point cloud mapping.

Self-Containment for Max Mobility

- On-board controller (arduino nano).
- Battery power source (rechargeable).

Uniaxial Design

- Explore different slip ring configurations to eliminate need for gear train or belts. Implement onto stepper motor.