Nitriding Fixture for Spline and Quill Shafts

Ruben Chaidez, Sarah Millen, Sierra Stahl, Owen Trimble
Department of Mechanical and Aerospace Engineering at University of California, Irvine
Sponsored by David Workman and Kevin Ortiz from Northrop Grumman

Executive Summary

The goal of this project is to design a safety focused fixture that can undergo the nitriding process while supporting three splined shafts and one quill shaft.

The nitriding process increases surface hardness, friction, and resistance of the material to corrosion of the four shafts.

The design process for the fixture included material selection, thermal analysis, finalizing dimensions through calculations and simulations, and creating engineering drawings for each part.

Material Analysis

Stainless Steel 330 *(bulk material)*
Material Strength at 1000ºF: 37700 psi
Thermal Expansion (α): 9.28 µ-in/ºF
Corrosion:18-20% chromium

Stainless Steel 316 *(bolts, nuts, and U-bolts)*
Material Strength at 1000ºF: 27500 psi
Thermal Expansion (α): 9.72 µ-in/ºF
Corrosion:16% chromium

$$\frac{\Delta L}{L} = \alpha[\Delta T]$$

ΔL = Change in Length
ΔT = Change in Temperature
α = Coefficient of Thermal Expansion (CTE)

Initial Bolt Diameter: L = 0.75 in
Change in Temperature:
ΔT = 1000ºF - 70ºF = 930ºF
Change in Length:
$\Delta L = \alpha L \Delta T$ = (9.72)(0.75)(930) = 0.00678 in

Cost Analysis

Stainless Steel 330 *(bulk material)*
~$23.89 per lb. *
Stainless Steel 316 *(bolts, nuts, and U-bolts)*
Nuts: $2.00
Bolts: $15.82
5/8" U-bolts: $95.92
7/8" U-bolts: $217.93

*Cost was determined on a per lb. basis, however material will be purchased in plates, sheets, bars, etc.

Structural Analysis

Factor of Safety of Spline Attachment

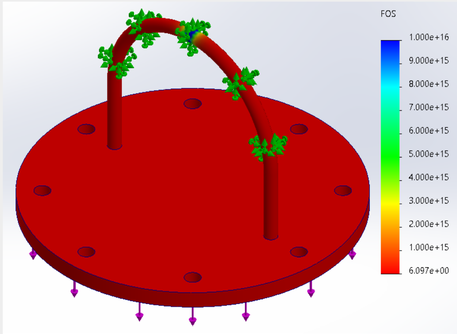

Weld Strength Equation *(Filler: Inconel 82)*

$$P = \sigma_c L_{eff} t \cos(45^o)$$

Weld Strength: P = 14576 lbs
Allowable Connection Stress*: σ_c = 24 ksi
Effective Length: $L_{eff} = \pi D$ = 1.96 in
Fillet Thickness**: t = 0.1875 in

*Allowable connection stress (σ_c) determined from AWS D1.1 standards.

**Minimum fillet thickness size (t) according to AWS D1.1 standards

Key Features of Project

Initial Design Sketch

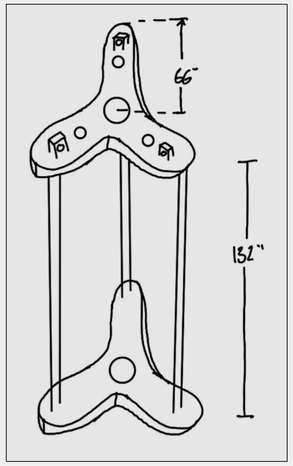

Initial Design CAD

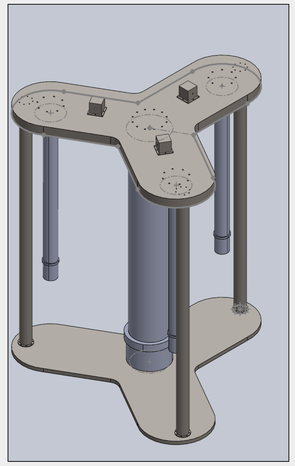

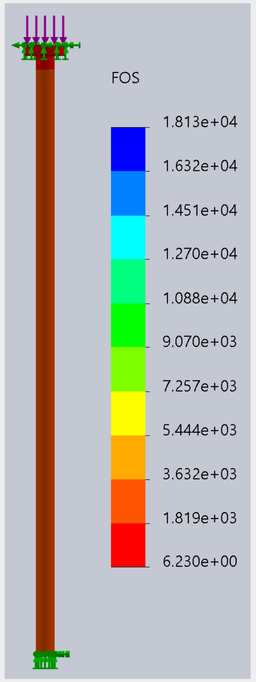

Factor of Safety of Support Column

Critical Buckling Load Equation

$$P_{cr} = \sigma_y A\left[1 - \left(\frac{\sigma_y}{4\pi^2 E}\right)\left(\frac{L_e}{r}\right)^2\right]$$

Critical Buckling Load:
P_{cr} = 2.5e+05 lbs

Maximum Deflection Due to Eccentricity Equation

$$y_{max} = e\left[\tan\left(\sqrt{\frac{P}{EI}}\frac{L}{2}\right)\sin\left(\sqrt{\frac{P}{EI}}\frac{L}{2}\right) + \cos\left(\sqrt{\frac{P}{EI}}\frac{L}{2}\right) - 1\right]$$

$$= e\left[\sec\left(\sqrt{\frac{P}{EI}}\frac{L}{2}\right) - 1\right]$$

Support Column Deflection:
y_{max} = 1.409
Note: for maximum eccentricity value
e = 0.812 in

Final Design

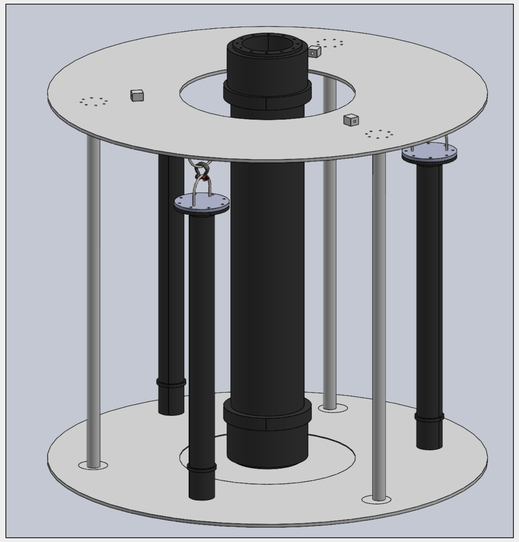

Future Recommendations

The fixture could be used for nitriding of similar shafts which could be set on the bottom plate instead of the quill shaft. Use caution with the size of the clevis used to ensure Splined shafts don't drag on bottom plate. Temperatures significantly higher than 1000ºF may threaten the structural integrity of the fixture.

Acknowledgments

UCI Department of Mechanical and Aerospace Engineering: Professor Mark Walter and Professor David Copp
Northrop Grumman: David Workman and Kevin Ortiz